Climate, Disaster and Development Journal
Open access peer-reviewed papers

Modeling of degraded reefs in Leyte Gulf, Philippines in the face of climate change and human-induced disturbances

Barron Cedric A. Tan[1] · Jonathan A. Anticamara[1] · Maria Ching S. Villanueva[2]

[1]*Institute of Biology, College of Science, University of the Philippines-Diliman*
[2]*Laboratoire de Biologie Halieutique, IFREMER, France*

Received: 07 February 2017 / Accepted: 08 June 2017 / Published online: 07 August 2017

Abstract

Philippine reefs are mega-diverse but, to date, few ecosystem models have been developed to understand their dynamics and functioning. This study assessed the status of reefs in 12 municipalities of Leyte Gulf, Philippines. It is an important fishing ground experiencing degradation and impacts of super-typhoons—the strongest one was Haiyan (local name: Yolanda). Empirical and literature data were used to develop Ecopath (trophic) models and Ecosim simulations to evaluate the impacts of reduction and increase in coral cover or productivity on the Leyte Gulf Reef (LGR) ecosystem. Results showed that the LGR's ecosystem is in a degraded state—dominated by small-medium herbivores and carnivores, with most productivity immediately returned to detritus. In addition, a comparative study of two Ecopath models showed that reduction in the coral cover (e.g., by Super-Typhoon Haiyan) will result in a decline in biomass of many functional groups. Changes in LGR's productivity (e.g., eutrophication) will also strongly impact most functional groups (e.g., shift to overdominance of herbivores that take advantage of algal growth and extirpation of coral reef-dependent species). Moreover, additional climate-related or human-induced disturbances on the degraded LGR will further decrease the reef's productivity. Therefore, effective recovery and management of degraded reef ecosystems is needed to sustain the LGR's productivity (e.g., reef fisheries production).

Keywords: conservation · climate change · ecological modeling · fisheries · Philippine reefs

DOI: https://doi.org/10.18783/cddj.v003.i01.a01

Corresponding Author:
Barron Cedric A. Tan
tanbarroncedric@gmail.com

This article is part of the Special Issue on
"Vulnerability and adaptation to devastating impacts of typhoon disasters in the Philippines"

Introduction

Ecosystem Models (EcoMs such as Ecopath with Ecosim EwE) are popular tools for understanding ecosystem dynamics and are useful in management (Cisneros-Montemayor, Christensen, Arreguin-Sanchez, & Sumaila, 2012; Longo et al., 2015; Plagányi & Butterworth, 2004). EcoMs provide an opportunity to explore scenarios regarding ecological systems' responses to change that is often difficult to test in the field for logistical, political, or financial reasons. With the increasing knowledge of coral reef ecosystem processes and the rise in computing power, dynamic trophic EcoMs are becoming widely used in assessing the effects of natural and anthropogenic stressors on reef ecosystem functions (Christensen & Walters, 2003; Christensen, Walters, & Pauly, 2005).

In tropical countries with high diversity such as the Philippines, however, EcoMs are not well explored or applied as management tools in fisheries and coastal management. The main reasons for the general lack of Philippine EcoM exploration and applications are the deficiency of (1) independent data from regular biological and environmental surveys (e.g., systematic reef fisheries surveys); (2) basic life-history data for many species (e.g., reproduction and population growth of many Philippine reef species); (3) localized species diet composition or trophic relationship studies; and (4) reliable catch or productivity data from reef ecosystems. To date, publications on Philippine EcoMs such as EwE are few and very limited (Aliño et al., 1993; Bacalso & Wolff, 2014; Campos, 2003). The EwE model presented in this paper is different from the previous model for Leyte Gulf (e.g., Campos, 2003) for the following reasons: (1) the current model uses a more detailed underwater reef fish survey data for 12 municipalities along Leyte Gulf; (2) it simulates the impacts of super-typhoon Haiyan (local name: Yolanda); and (3) it examines the effects of productivity changes (eutrophication).

This study achieved the following: (1) produced a current estimate of the status (i.e., diversity and biomass) of reef fishes in LGR using standardized Underwater Visual Census data; (2) gained insights on the current trophic relationships and functioning of the LGR ecosystems using the static component of EwE (i.e., Ecopath Models); and (3) predicted the trajectories of changes in biomass of trophic functional groups in LGRs when subjected to super-typhoons such as Haiyan or eutrophication using the dynamic component of EwE (i.e., Ecosim).

Materials and Methods

Study Area

This paper presented EwE models of a depleted coral reef ecosystem in the Philippines (Anticamara & Go, 2016; Go et al., 2015). The modeled reef areas focused on 12 municipalities within Leyte Gulf (approximately 130 km north-south and 60 km east-west), from the municipality of Balangiga in Eastern Samar up to the municipality of Abuyog in Leyte (Figure 1).

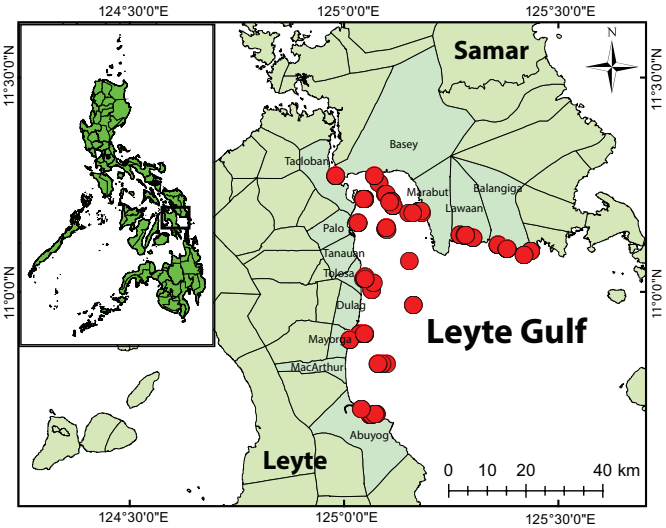

Figure 1. Map of Leyte Gulf and the 12 municipalities along with the locations of surveyed belt transects (red circles)

The sites were chosen because these reefs are: (1) important fishing grounds with many coastal fishers heavily dependent on these for their main source of food, income, and livelihood in municipalities that are among the least developed in the Philippines (Leyte Gulf municipalities), (2) already degraded and suffering fisheries decline based on previous studies (Anticamara & Go, 2016; Go et al., 2015), and (3) prone to super-typhoons passing through the Pacific side of the Philippines—the strongest was super-typhoon Haiyan. Thus, these reef study sites are ideal for evaluating impacts of climate change (such as super-typhoon) on already degraded but still heavily exploited reefs. Results from this study should be useful in providing insights on how to manage LGRs.

The modelled area of Leyte Gulf was surveyed from September to October in 2015 using standardized Underwater Fish Visual Census (UVC). It was conducted over 133 belt transects (Figure 1), 20 x 5 m each (Anticamara & Go, 2016). All belt transects were placed parallel to the reef slopes with depths ranging from 4 to 20 m. Most of the surveyed reefs were in shallow areas of about 4 to 7 m depth, with the exception of a few reef areas found at depths of about 15 to 20 m. All UVCs were conducted during daylight from around 9:00 am to 3:00 pm for 20 minutes per transect. During each UVC, all encountered non-cryptic reef fish were identified, counted, and measured in size (to nearest cm).

Model Construction

A trophic model of the reef ecosystem was constructed using the EwE software (ver. 6.4.11414.0, freely downloadable

at http://ecopath.org/) (Christensen & Walters, 2003; Christensen et al., 2005; Pauly, Christensen, & Walters, 2000). The basic equation for the Ecopath process is expressed as a linear equation (1) with all its components explained and summarized in Table 1.

$$B_i \cdot \left(\frac{P}{B}\right)_i \cdot EE_i - \sum_{j=1}^{n} B_j \cdot \left(\frac{Q}{B}\right)_j \cdot DC_{ji} - Y_i - E_i - BA_i = 0 \qquad (1)$$

Defining the Ecopath Model Compartments

The Ecopath model was constructed based on 18 functional groups (Table 2) divided into 7 fish and 11 non-fish components. All functional groups were defined based on major taxonomic grouping (i.e., fish, invertebrate, or plankton), ecological function (i.e., producer or consumer), and similarities of feeding behavior (i.e., trophic guilds).

Ecopath Model Inputs and Data Sources

Fish biomass (B) per species was computed using equation (2) where L is fish length data from the UVC surveys and a-b are Length-Weight (L-W) relationship data taken from FishBase. FishBase is the most comprehensive database that compiles and provides biological (e.g., growth, feeding, reproduction), ecological (e.g., population dynamics, trophic interactions), genetic, and taxonomic information of all known fish species in the world (Fröese & Pauly, 2014; http://www.fishbase.org).

$$B = a \cdot L^b \qquad (2)$$

For species with no known L-W relationships, the closest counterpart of the same maximum size was used. The fish species were then assigned their appropriate functional

Table 1. Variables used for the Ecopath basic equation (1).

Variable	Name	Description
B_i	Biomass	Biomass of prey i
B_j	Biomass	Biomass of prey j
$\frac{P}{B}$	Production/Biomass	Equivalent to the instantaneous rate of total mortality (Z) used by fisheries biologist (Allen, 1971)
EE	Ecotrophic Efficiency	The fraction of the production that is used in the system, i.e., either passed up the food web, used for biomass accumulation, migration or export
$\frac{Q}{B}$	Consumption/Biomass	Intake of food by a group over the time period considered
DC_{ji}	Diet Consumption	Fraction of prey i in the diet of predator j
Y	Catch	Fishing mortality
E	Emigration	Net migration rate
BA	Biomass Accumulation	Calculated as the difference between biomass at the beginning of the year and at the beginning of next year

Table 2. Diet matrix of the Leyte Gulf Ecopath model.

No.	Prey \ predator	1	2	3	4	5	6	7	8	9	10	11	12
1	Piscivore	0.105											
2	Carnivore	0.140							0.050	0.002			
3	Herbivore	0.173							0.080	0.002			
4	Corallivore	0.010							0.010	0.001			
5	Planktivore	0.050							0.020	0.001			
6	Benthos feeder	0.020											
7	Detrivore	0.080											
8	Cephalopods	0.100	0.150						0.040	0.002			
9	Crustaceans	0.100	0.165		0.015		0.100		0.150	0.050			
10	Molluscs	0.100	0.150		0.010		0.010	0.005	0.210	0.120			0.050
11	Sea cucumber	0.020	0.045				0.020	0.001					
12	Urchin	0.020	0.050		0.010		0.010	0.001		0.002			0.050
13	Benthos	0.082	0.245	0.040	0.020	0.004	0.700	0.035	0.120	0.220	0.150		0.200
14	Coral		0.100	0.005	0.700		0.050					0.005	
15	Zooplankton		0.020	0.040	0.055	0.490	0.005	0.005	0.150	0.100	0.250	0.200	
16	Phytoplankton		0.020	0.035	0.050	0.405	0.005	0.005	0.150	0.100	0.200	0.245	
17	Macrophytes		0.005	0.800	0.090	0.001		0.100		0.100	0.050	0.100	0.400
18	Detritus		0.050	0.080	0.050	0.100	0.100	0.848	0.020	0.300	0.350	0.450	0.300
19	SUM	1	1	1	1	1	1	1	1	1	1	1	1

group conventions according to their diet. Next, fish mean weight (or biomass) was averaged across all surveyed transects. Mean biomass values for fish species belonging to the same functional group were summed to get the estimate of the total biomass (t/km^2) per functional group.

Fish production/biomass ($\frac{P}{B}$) and consumption/biomass ($\frac{Q}{B}$) ratios were taken from the fish life-history data available in Fishbase (Fröese & Pauly, 2014). Where the life-history data were insufficient or lacking, the missing parameters were calculated from Allen's (1971) equation for production/biomass, while consumption/biomass rates were estimated using Palomares and Pauly's (1998) empirical formula.

The $\frac{P}{B}$ and $\frac{Q}{B}$ values (Appendix Table 1A-B) for the non-fish functional groups were taken from literature on similar reef ecosystem models elsewhere in the Philippines (Aliño et al., 1993; Bacalso & Wolff, 2014; Bundy & Pauly, 2001; Campos, 2003).

Diet composition data (Table 2) for the fish groups were obtained from Fishbase (Froese & Pauly, 2014). For the non-fish species, published diets from similar systems in the Philippines were used (Aliño et al., 1993; Bacalso & Wolff, 2014; Bundy & Pauly, 2001; Campos, 2003).

Since the linear equation (1) of Ecopath represents a mass-balanced system, any missing parameters can be solved assuming three of the four input parameters (B, $\frac{P}{B}$, $\frac{Q}{B}$, EE) are present (Christensen & Walters, 2003; Christensen et al., 2005). Ecotrophic Efficiency (*EE*) is a proportion of the production used in the system. *EE* values for exploited fish and benthic species would have values close to 1 depending on their importance in the fisheries and/or as preys. Biomass for the rest of the non-fish groups were solved by providing *EE* values as suggested by Guenette (2014). Macrophytes and its component groups were given *EE* values of less than 0.3. Phytoplankton, often seen to usually die off in systems where heavy blooms occur, was given an *EE* value of 0.5.

For the fishing effort, data were based on simple and standardized field surveys from randomly selected or referred fishers to identify frequented fishing grounds and area, duration and frequency, gear used, catch weight, species catch composition, and income. Annual catch per fishing gear was calculated as the product of the mean catch per unit effort, the estimated number of days it is operated within a year, and the observed number of fishing gears operating in the defined fishing area per municipality.

Ecopath Model Parameterization and Balancing

To balance the Ecopath model, the *EE* value for all functional groups should lie in the acceptable range between 0 and 1. Groups with *EE*s exceeding 1 should be adjusted starting from the group with the highest *EE* value. Adjustments were made in the unbalanced groups' original basic input parameters and diet composition in ±5% increments beginning with the less precise input values (i.e., those groups with no empirical biomass estimates from UVC).

Ecopath Model Quality Checking

Tests used to verify the realism of the Ecopath model included the Pedigree Index (PI) (Funtowicz & Ravetz, 1990), Mixed Trophic Impact (MTI) (Ulanowicz & Puccia, 1990), and Summary Statistics (SS) generated by the software after Ecopath model balancing. The generated SS was then used for comparison with other Ecopath-modeled systems in the Philippines.

Varying Coral Biomass and Ecosim Simulations

To simulate the effects of a climate hazard such as a super-typhoon or a human disturbance like destructive fishing practices to the ecosystem, a second Ecopath model was constructed wherein the coral biomass was halved. This was based on field observations and analyses on the impacts of super-typhoon Haiyan, which reduced most corals in Leyte Gulf by half of the pre-typhoon cover (Anticamara & Go, 2016). For the second model, $\frac{P}{B}$, $\frac{Q}{B}$, and *EE* for all functional groups were used as basic inputs (Anticamara & Go, 2016). All other biomass values for living groups were left for estimation by Ecopath, except for the coral biomass, which was set to 9.7 t/km^{2}yr based on the status of corals in the area and literature information. SS, flow diagram, MTI, and other Ecopath outputs were compared between the original Ecopath Model 1 and Model 2 to simulate how a sudden degradation of the corals affects the various functional groups.

After food web-trophic interactions and fisheries were defined in Ecopath, Ecosim was then used to predict biomasses for each modelled group through time (Christensen et al., 2005). To evaluate changes in system production due to climate change or other anthropogenic activities, forcing functions for primary production were simulated for 50 years starting from 2016 up until 2065. Twelve scenarios were applied to the model to represent changes in primary productivity from a decrease of 30% to an increase of 30% in 5% decrements or increments relative to the base Ecopath model. Ecosim outputs were then used to map-out which functional groups respond greatest to changes in productivity and to quantify their relative rates of change.

Results

Community Structure, Trophic Flows, and Interactions

From the UVC of 133 transects across Leyte Gulf, a total of 21,120 fish individuals were recorded, comprised of 152 distinct species belonging to 28 fish families. For EwE modeling purposes, the 152 fish species were assigned to

seven fish functional groups based on their feeding habits as identified in Fishbase (Table 2 and Appendix Table 1A-B).

The balanced Ecopath model indicated that the Leyte Gulf ecosystem was heavily supported by trophic levels 1 to 3 in terms of biomass, for both the original Ecopath model 1 and the halved coral biomass Ecopath model 2 (Figure 2A-B). Although there were no visible differences in the food web ecosystem structure as depicted in the trophic flow diagram of Ecopath models 1 and 2 outputs (Figure 2A-B), the biomass of most major functional groups were reduced to about half in Ecopath model 2 when the coral biomass was halved (Appendix Table 1A-B).

Both Ecopath models 1 and 2 showed that the LGR ecosystem was heavily supported by macrophytes, benthos, phytoplankton, molluscs, and coral in terms of biomass (Appendix Tables 1A-B). In terms of fish biomass, both Ecopath models 1 and 2 indicated that the ecosystem was heavily supported by the carnivores and herbivores (Figure 1A-B, Appendix Tables 1A-B). Most of the major contributors to the LGR ecosystem biomasses (both fish and non-fish functional groups) suffered great reductions to about half when coral biomass was reduced (Appendix Tables 1A-B).

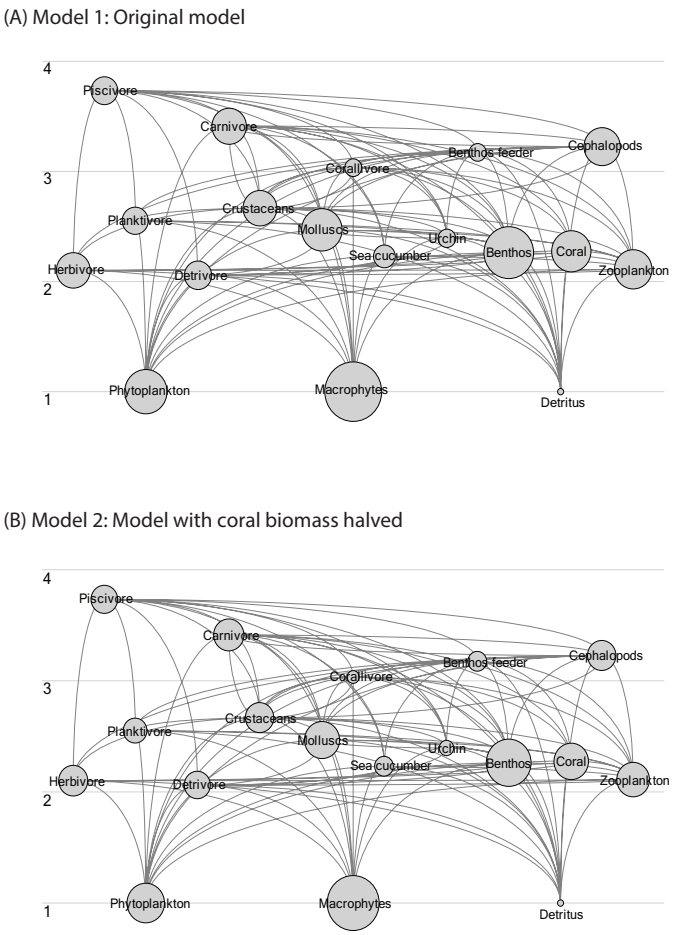

Figure 2. Flow diagrams showing the trophic level (y-axis) and the relationships between the functional groups (bubbles) in models 1 (A) and 2 (B). Bubble size represents biomass values.

In addition, both Ecopath models 1 and 2 showed that the majority of the primary production and detritus consumed by the upper trophic levels (TLs) were immediately recycled back to detritus and a relatively small portion of Total System Throughput (TST) was passed through the next higher TLs (III-V)—indicating a relatively short food chain and rapid biomass recycling (Figure 3A-B).

Moreover, for both Ecopath models 1 and 2, the MTI plots showed that detritus had a strong positive impact on other functional groups in the LGR ecosystem, while fish carnivores had strong negative impacts on other functional groups in the LGR ecosystem (Figure 4A-B).

Ecopath Model System Properties

The balanced Ecopath models 1 and 2 showed a TST value of 16,922 and 8,665 t/km^{2}yr, respectively (Table 3). About one third of the annual TST of Leyte Gulf was recycled back to the detritus as flows, while about one third of TST supported the consumption and exports of the ecosystem (Table 3). The Total Net Primary Production (NPP) of Leyte Gulf ecosystem was about less than half of the TST for both Ecopath models 1 and 2 (6,799 and 3,479 t/km^{2}yr, respectively) (Table 3). Estimated Finn's Cycling Index (FCI) for both Ecopath models 1 and 2 was 4.96 (Table 3). The Connectance Index (CI) was similar (0.38) for both Ecopath models 1 and 2 (Table 3). The system Omnivory Index (OI) was quite similar for both Ecopath models (0.25 and 0.24, respectively) (Table 3). When compared to published reef Ecopath models, the current Ecopath models 1 and 2 showed lower FCIs, but higher TST values compared to both Danajon Bank and San Miguel Bay and lower TST compared to Bolinao (Table 3). In addition, when compared to other reef ecosystems in Asia, Pacific, and Caribbean, Ecopath models 1 and 2 showed much lower TST values (Table 3). Overall trends in terms of sum of consumption, exports, and flows to detritus appeared generally similar between LGR and other Philippine Ecopath models in terms of proportion relative to TST (Table 3).

Ecopath Model Quality

Ecopath models 1 and 2 showed no functional group having an EE value of greater than 1 when balanced (Appendix Table 1). All *EE* values lie in reasonable ranges, with the highest TLs (apex predators) having smaller *EE*s; and conversely, small organisms or lower TL groups with considerable predation pressures had *EE*s closer to 1. No functional group had a gross food conversion efficiency or $\frac{P}{B}$ value higher than 0.3 and all $\frac{P}{B}$ were less than the net efficiency.

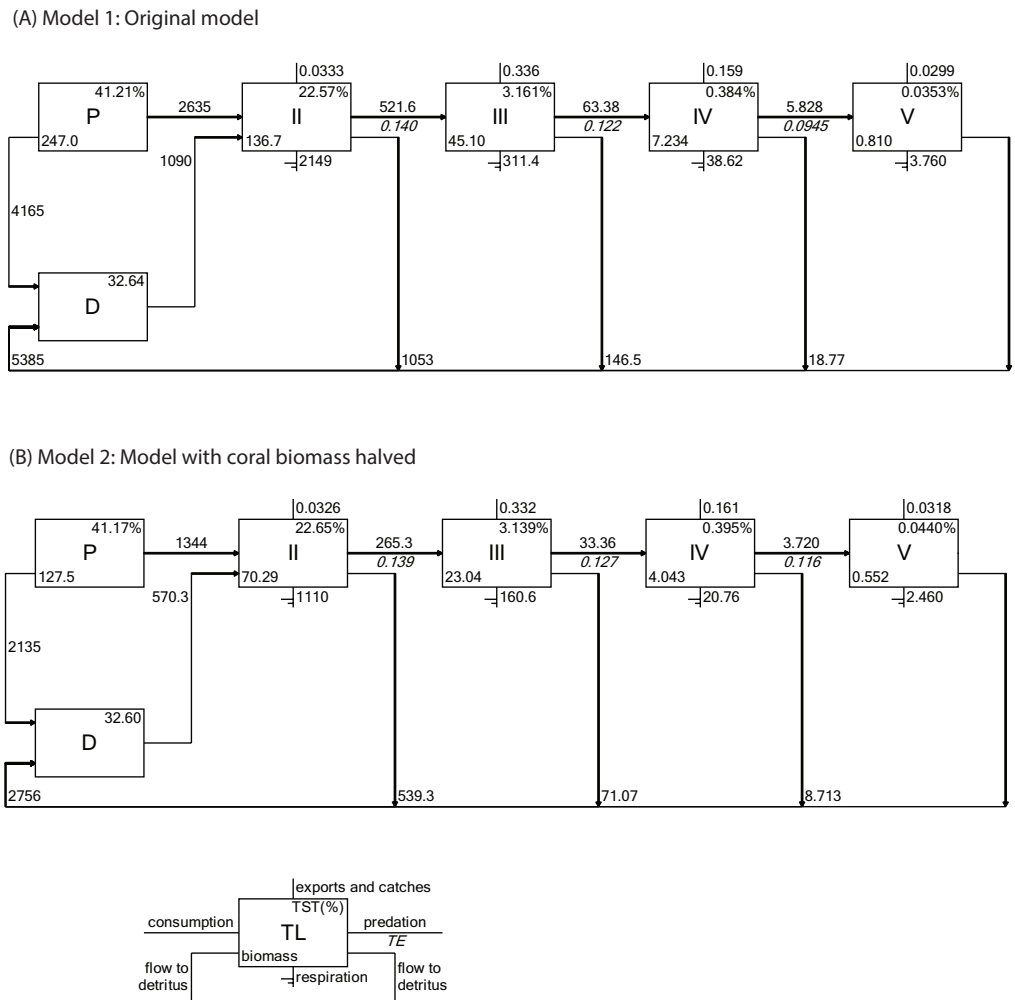

Figure 3. Lindeman spine diagrams for models 1 (A) and 2 (B) showing the transfer of energy flows and energy cycling along the trophic levels in the system (see schematics for additional legends).

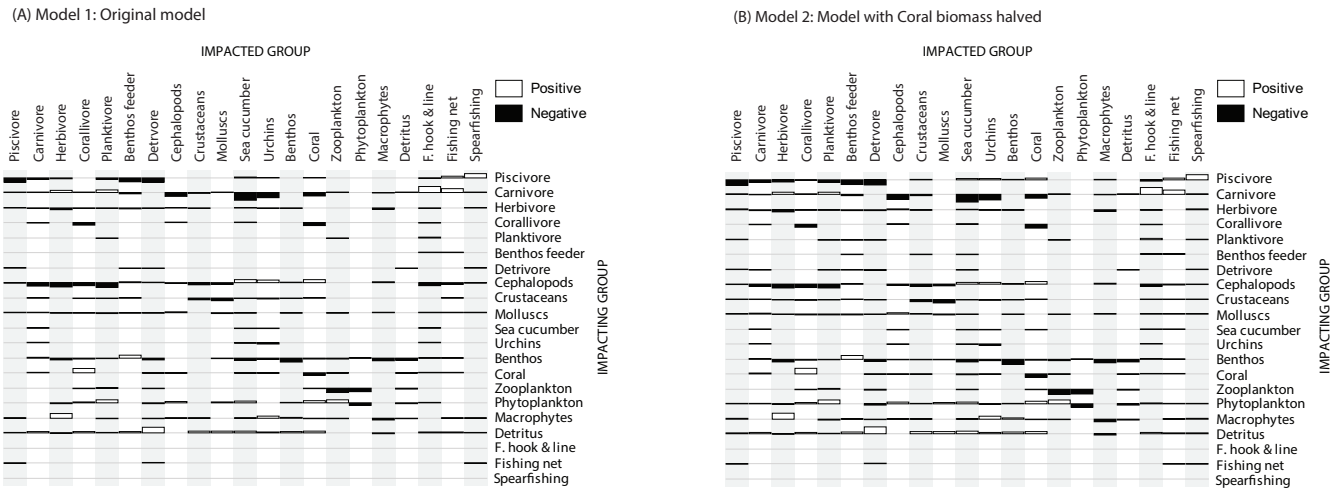

Figure 4. Mixed trophic impact (MTI) plot indicating how an increase in the biomass of an impacting group (rows) can affect the biomass of the impacted groups (columns); Positive impacts are displayed by white bars above the line, while negative impacts are displayed by black bars below the line

Biomass estimates for fish groups in both Ecopath models 1 and 2 constructed here were based on primary sourced UVC fish survey data. $\frac{P}{B}$ and $\frac{Q}{B}$ values were taken from similar ecosystems. From our sensitivity analyses, both Ecopath models 1 and 2 have PIs of 0.536 (Table 3). Based from Morissette's (2007) worldwide compilation and study of 150 published Ecopath models whose PI's ranged from 0.164 to 0.675, the current Ecopath models 1 and 2 were considered good and was situated within the higher ranges of PI values.

Ecosim Simulations of Primary Productivity and Associated Changes

Ecosim simulations of reduced productivity (i.e., all scenarios from -5 to -30%) indicated that the functional groups in Leyte Gulf ecosystem would decrease in biomass from about 15 to 30% (Figure 5). In particular, herbivores, cephalopods, macrophytes, urchins, and planktivores showed an average 30% reduction in biomasses. It is also observed that an important decrease (simulated decreases of 5% decrements) in productivity will lead to greater corresponding biomass reduction of sensitive functional groups (Figure 5).

On the other hand, Ecosim simulations of increased productivity (i.e., all scenarios from +5 to +30% increase) indicated that most (90%) functional groups would show greater than or equal to 20 to 40% increases in biomass, in particular the low trophic ones (Figure 5). Benthos feeder, piscivore, cephalopods, detrivores, and urchin were the top five functional groups that showed the greatest increases when productivity was increased.

Table 3. Summary statistics for both LGR Ecopath Models 1 and 2 compared with summary statistics from other modelled reef areas

Ecosystem attribute	High fisheries catch						Low fisheries catch		
	Nanwan Bay Taiwan	Bolinao Pangasinan	S. Miguel Bay South Luzon	Danajon Bank Bohol	**Leyte Gulf Model 1**	**Leyte Gulf Model 2**	Fr. Polynesia Pacific	Tampalam Mex. Carrib.	Floreana Isl. Galapagos
Sum of all Consumption	8,373.00		769.00	1,653.00	**4,738.01**	**2,430.77**		18,347.00	51,600.00
Sum of all Exports	16,200.00		516.00	378.00	**4,295.83**	**2,185.84**		3,376.00	5,412.00
Sum of all Respiratory Flows	4,629.00	19,965.00	382.00	875.00	**2,503.49**	**1,296.58**		11,226.00	27,638.00
Sum of all Flows to Detritus	20,115.00	18,405.00	931.00	900.00	**5,385.25**	**2,755.54**		12,253.00	21,024.00
Total System Throughput (TST)	49,317.00	39,307.00	2,599.00	3,805.00	**16,922.57**	**8,665.73**		42,202.00	94,850.00
Total Net Primary Production (NPP)	20,199.00		898.00	1,253.00	**6,799.31**	**3,479.36**	11,350.00	14,293.00	13,250.00
Sum of all Production	21,553.00	1,938.00	1,081.00	1,701.00	**8,086.24**	**4,130.39**		18,053.00	17,337.00
Net system production	15,570.00		516.00	378.00	**4,295.83**	**2,185.78**		3,067.00	14,388.00
Biomass: TST ratio (B:TST)	0.04	0.05	0.01	0.04	**0.03**	**0.03**		0.02	0.03
TPP: Total Respiration Ratio (PP:R)	4.40		2.35	1.43	**2.72**	**2.69**	1.10	1.30	0.50
TPP: Total Biomass Ratio (PP:B)	9.90		28.65	8.27	**15.57**	**15.43**		14.10	5.10
FCI (% of TST)	3.50		7.50	7.24	**4.96**	**4.96**	58.00		
Connectance Index			0.34	0.29	**0.38**	**0.38**			
System Omnivory Index			0.17	0.18	**0.25**	**0.24**			
Ecopath Pedigree index	0.586			0.536	**0.536**	**0.536**			

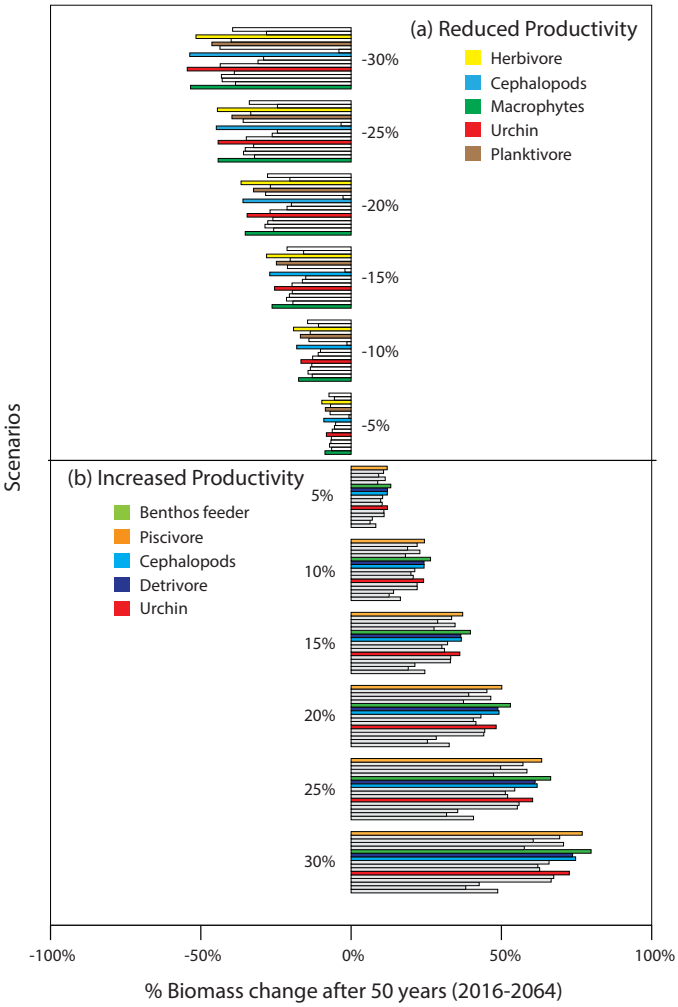

Figure 5. Projected biomass value changes in response to different scenarios of decreasing and increasing (-30 to +30%) primary productivity after a simulation period of 50 years (2016-2064). Functional groups for each scenario are arranged top-down as they also appear numbered in Table 2. Colored bars are selected functional groups that had the greatest mean response to primary productivity changes.

Discussion

LGR Ecosystem: Structure, Flow, Interactions, and Properties

Overall, Ecopath models 1 and 2 showed that the Leyte Gulf ecosystem is a degraded system as evident in the following: (1) the dominance of small-medium herbivorous and carnivorous fish species, (2) the low TST levels compared to other relatively healthy reef/coastal ecosystems, (3) short food chain and low biomass accumulation at higher TLs, and (4) rapid conversion of most productivity back to the detritus.

Based on the UVC conducted across Leyte Gulf, most of the reefs and coastal areas included in the surveys had low fish density and biomass, and were mostly dominated by small-medium bodied species (e.g., parrotfishes, snappers, surgeonfish, wrasses, and rabbitfishes) (Anticamara & Go, 2016; Anticamara, Go, Ongsyping, Valdecañas, & Madrid, 2015; Go et al., 2015). In addition, majority of the reefs that were surveyed had low coral cover, partly due to destructive fishing in most reefs (e.g., use of dynamite and bottom trawl) and the frequency of strong typhoons impacting the reefs in Leyte Gulf in recent times (Anticamara & Go, 2016).

TST estimates based on Ecopath models 1 and 2 confirmed the degraded state of the ecosystem compared to other reefs in the Caribbean and the Pacific (Arias-Gonzalez, Delesalle, Salvat, & Galzin, 1997; Arias-González, Nuñez-Lara, González-Salas, & Galzin, 2004; Okey et al., 2004). When compared to other Philippine Ecopath models, TST estimates indicated that LGR is less degraded compared to other reefs modelled in the Philippines such as Danajon Bank (Bacalso & Wolff, 2014) and San Miguel Bay (Bundy & Pauly, 2001), but appeared to be more degraded compared to the outdated Bolinao Ecopath model (Aliño et al., 1993). Field observations of Bolinao based on recent UVC indicated that it seems as degraded as Leyte Gulf to date (Anticamara et al., 2015; Go et al., 2015).

Moreover, Ecopath models 1 and 2 indicated that the ecosystem operated through a short food chain, where most of the productivity was rapidly converted back to detritus, and only a small amount of lower TL group biomasses was assimilated by higher TL groups. Other reefs in the Caribbean have also demonstrated similar trophic structure and flows which may suggest a typical functioning of a reef (Arias-Gonzalez et al., 1997; Arias-González et al., 2004). However, in the case of LGR, the rapid recycling of biomass back to detritus was driven mainly by the lack of top and intermediate TL species that can optimize energy assimilation and conversion to higher TLs.

Ecopath models 1 and 2's CIs, OIs, FCIs also suggested the degraded state of the LGR ecosystem compared to other less exploited sites (Table 3). However, it is very difficult to interpret most of the current estimates and ecosystem properties obtained here because of the lack of comparable Ecopath models of intact and more mature ecosystem in the area. Most of the Marine Reserves (MRs) or no-take zones that were surveyed in Leyte Gulf did not have marker buoys on their boundaries so it is hard to determine which sites were inside the well-enforced MRs and which ones were outside.

Effects of Halving Corals on LGR Ecosystem

Comparison of outputs of Ecopath models 1 and 2 gave insights on possible responses of functional groups in the ecosystem when coral biomass is halved. The results showed that most of the LGR ecosystem structure, trends in energetic flows, strength in interactions, and system properties were somewhat roughly maintained, but mostly

just slashed to half their original values in Ecopath model 1. This is important to know since, in recent times, the LGR ecosystems have been subjected to super-typhoons that halved the coral cover in most reefs after impacts (Anticamara & Go, 2016). In addition, after every typhoon, most of the relief and government agencies that responded to the impacted areas in Leyte Gulf supported affected populations by giving more fishing boats and motor engines. This support is ironic since the scenario implemented in Ecopath model 2 suggested that such an investment will simply be wasted, as fish production in the system will considerably decrease due to heavy coral cover destruction in the areas after the typhoon. Perhaps diversified alternative livelihoods or post-typhoon reef recovery plans will be better investments in the LGR ecosystem, or in the Philippines in general, while waiting for the corals and the reef productivity to recover after a typhoon.

Simulations of Primary Productivity Changes and Impacts on LGR Ecosystem

Ecosim simulations showed that reductions in primary productivity of LGR across various defined scenarios led to reductions in biomasses of many important functional groups in the area. Specifically, a range of productivity reduction scenarios from -5 to -30% was predicted to have mostly greater than or equal to 30% biomass reduction in the top five productivity-sensitive functional groups of LGR. In contrast, Ecosim simulations of productivity increases in LGR yielded greater than or equal to 37% increases in biomasses of most functional groups in the system. This is an important insight since it was observed from field surveys that most of the reef ecosystems in Leyte Gulf had experienced increases in algal cover, especially after strong rainy days and typhoons, due to the nutrient run-off from nearby agricultural lands and urban areas. In addition, most of the coastal areas of Leyte Gulf have lost its forest cover from the conversions of vast expanse of coastal forests into coconut plantations. This means that most likely, in the following years, the nutrient run-off in Leyte Gulf will intensify as (1) more agricultural lands are fertilized indiscriminately; (2) more urban areas will dump untreated sewage into the coastal ecosystem; and (3) more coastal forest are denuded in the area. Ecosim predicted that the most likely response to primary productivity increases (the most plausible scenario for Leyte Gulf) will be a general increase in biomasses of most functional groups. However, it was not determined what exactly will be the implications in terms of coastal phytoplankton blooms (e.g., harmful algal blooms [HABs]), changes in ecosystem structure and functioning or other potential related ecosystem responses after intensified primary productivity increases, in areas where most consumers of excess primary productivity were mostly depleted. Several HABs have been reported in coastal areas of the Philippines, but most of these reports have not quantified trophic impacts and even the dynamics of phytoplankton and zooplankton communities during and after the bloom (Azanza & Taylor, 2001; Hallegraeff, 1993; Wells et al., 2015)

LGR ecosystem EwE models: Implications

Ecopath models 1 and 2 provided insights on how such a degraded and depleted ecosystem is functioning in terms of trophic structure, flow, interactions, and system properties. In addition, they provided useful perspectives on the current state of reef degradation and the need to closely monitor the endangered reef ecosystems in Leyte Gulf in case of further climate-related changes and overfishing impacts. The current state of the Leyte Gulf ecosystem calls for implementation of effective recovery and management strategies such as the following: no-take MRs, fishing closures for depleted populations, active recovery of coral cover, and prevention of unregulated nutrient run-off of the inputs into the system.

Conclusions

There are three key findings about the current and plausible scenarios for Leyte Gulf ecosystem: (1) LGR ecosystems are in a degraded state dominated by few and small-medium herbivores and carnivores; (2) reduction in live coral cover due to typhoons will cause a decline in biomass of many functional groups in LGR; and (3) changes in productivity (e.g., eutrophication) will impact most functional groups in LGR. Thus, there is a great need to improve the recovery and management of coastal and marine resources in the area to sustainably support the increasing demands for fisheries production and livelihood in Leyte Gulf, while mitigating further ecosystem degradation. This study also suggests that there is a great need to develop appropriate management responses and recovery and adaptation strategies in Leyte Gulf considering the depleted status of its coastal marine resources and the impending further declines brought by climate change and human-induced disturbances. Moreover, this study highlights the need to develop systematic monitoring of coastal marine ecosystems and trophic structure and functioning in Leyte Gulf in order to generate sufficient empirical data useful for developing more accurate EwE models and effective recovery and management strategies in the area.

Acknowledgements

Field work expenses was mainly supported by the Resilience and Preparedness for Inclusive Development (RAPID) – Natural Resource Assessment (NRA) project, implemented by Dr. Ariel Blanco of the UP Training Center for Applied Geodesy and Photogrammetry (UP TCAGP) and supported by the Philippine Climate Change Commission (CCC).

Additional support came from the University of the Philippines Office of the Vice-Chancellor for Research and Development (OVCRD) Open Grant Project No 141406OG, and the Foundation for Philippine Environment (FPE). We also thank Pio Angelo C. Ballesteros, Mark Angelo B. Pontica, and Marlon P. Gutierrez for their help during the field work for this study.

Appendix Table 1A. Input and output (in brackets) parameters, and data sources for the Leyte Gulf model 1

#	Functional group	*TL*	*B*	*P/B*	*Q/B*	*EE*	*P/Q*	*NE*	*OI*
1	Piscivore	3.73	(3.12)[a]	(1.10)[b]	(6.35)[b]	0.69	0.17	0.22	0.34
2	Carnivore	3.18	(9.58)[a]	(1.07)[b]	(7.04)[b]	0.91	0.15	0.19	0.27
3	Herbivore	2.27	(8.81)[a]	(1.53)[b]	(25.51)[b]	0.98	0.06	0.08	0.11
4	Corallivore	2.70	(0.76)[a]	(2.20)[b]	(21.04)[b]	0.92	0.11	0.13	0.26
5	Planktivore	2.43	(2.98)[a]	(1.67)[b]	(18.16)[b]	0.71	0.09	0.12	0.31
6	Benthos feeder	2.52	(0.76)[a]	(0.98)[b]	(7.23)[b]	0.57	0.14	0.17	0.18
7	Detrivore	2.42	(3.39)a	(1.10)[b]	(15.28)[b]	0.43	0.07	0.09	0.07
8	Cephalopods	2.94	12.03	(2.85)[C]	(9.81)[C]	(0.50)	0.29	0.36	0.42
9	Crustaceans	2.28	8.72	(5.70)[C]	(18.75)[C]	(0.80)	0.30	0.38	0.46
10	Molluscs	2.16	22.90	(3.16)[C]	(8.26)[C]	(0.80)	0.38	0.48	0.33
11	Sea cucumber	2.12	1.66	(2.71)[C]	(11.76)[C]	(0.80)	0.23	0.29	0.20
12	Urchin	2.21	0.88	(7.51)[C]	(20.70)[C]	(0.80)	0.36	0.45	0.37
13	Benthos	2.11	80.20	(4.82)[C]	(20.13)[C]	(0.80)	0.24	0.30	0.25
14	Coral	2.17	19.51	(1.66)[d]	(9.39)[d]	(0.80)	0.17	0.22	0.23
15	Zooplankton	2.06	14.55	(45.50)[C]	(136.90)[C]	(0.80)	0.33	0.42	0.11
16	Phytoplankton	1.00	28.03	(137.60)[C]		(0.50)			
17	Macrophytes	1.00	218.95	(13.44)[C]		(0.24)			
18	Detritus	1.00				0.20			0.30

Appendix Table 1B. Input and output (in brackets) parameters, and data sources for the Leyte Gulf model 2 with Coral halved

#	Functional group	*TL*	*B*	*P/B*	*Q/B*	*EE*	*P/Q*	*NE*	*OI*
1	Piscivore	3.73	3.12	(1.10)	(6.35)	(0.69)	0.17	0.22	0.34
2	Carnivore	3.18	5.34	(1.07)	(7.04)	(0.90)	0.15	0.19	0.27
3	Herbivore	2.27	4.55	(1.53)	(25.51)	(0.98)	0.06	0.08	0.11
4	Corallivore	2.70	0.34	(2.20)	(21.04)	(0.71)	0.11	0.13	0.26
5	Planktivore	2.43	2.00	(1.67)	(18.16)	(0.57)	0.09	0.12	0.31
6	Benthos feeder	2.52	1.01	(0.98)	(7.23)	(0.43)	0.14	0.17	0.18
7	Detrivore	2.42	2.88	(1.10)	(15.28)	(0.50)	0.07	0.09	0.07
8	Cephalopods	2.94	4.11	(2.85)	(9.81)	(0.50)	0.29	0.36	0.42
9	Crustaceans	2.28	4.16	(5.70)	(18.75)	(0.80)	0.30	0.38	0.46
10	Molluscs	2.16	10.42	(3.16)	(8.26)	(0.80)	0.38	0.48	0.33
11	Sea cucumber	2.12	1.05	(2.71)	(11.76)	(0.80)	0.23	0.29	0.20
12	Urchin	2.21	0.53	(7.51)	(20.70)	(0.80)	0.36	0.45	0.37
13	Benthos	2.11	41.32	(4.82)	(20.13)	(0.80)	0.24	0.30	0.25
14	Coral	2.17	(9.76)	(1.66)	(9.39)	(0.80)	0.17	0.22	0.23
15	Zooplankton	2.06	7.39	(45.50)	(136.90)	(0.80)	0.33	0.42	0.11
16	Phytoplankton	1.00	14.23	(137.60)		(0.50)			
17	Macrophytes	1.00	113.25	(13.44)		(0.24)			
18	Detritus	1.00				0.20			0.30

Model inputs are in parenthesis; biomass (B, t/km^2); production/biomass ratio (P/B, yr-1); consumption/biomass ratio (Q/B, yr-1); ecotrophic efficiency (EE); gross food conversion efficiency or production/consumption ratio (P/Q); Net efficiency (NE) and Omnivory index (OI).

[a] Underwater visual census (UVC)

[b] Fishbase (Froese & Pauly, 2014)

[c] Aliño (1993), Bacalso & Wolff (2014), Bundy and Pauly (2001), Campos (2003)

[d] Bozec et al. (2004), Okey et al. (2004), Tesfamichael (2012)

References

Aliño, P. M., McManus, L. T., McManus, J. W., Nafiola, C., Fortes, M. D., Trono G.C., & Jacinto, G. S. (1993). Initial parameter estimations of a coral reef flat ecosystem in Bolinao, Pangasinan, northwestern Philippines. In *ICLARM Conference Proceedings: Models of Aquatic Ecosystems* (pp. 252–267).

Allen, K. R. (1971). Relation between production and biomass. *Fisheries Research Board of Canada*, 28, 1573–1581. https://doi.org/10.1139/f71-236

Anticamara, J. A., & Go, K. T. B. (2016). Impacts of super-typhoon Yolanda on Philippine reefs and communities. *Regional Environmental Change*, pp. 1–11. https://doi.org/10.1007/s10113-016-1062-8

Anticamara, J. A., Go, K. T. B., Ongsyping, S. S., Valdecañas, A. T., & Madrid, R. G. S. (2015). National patterns of Philippine reef fish diversity and its implications on the current municipal-Level management. *Science Diliman, 27*(1), 1–47. http://journals.upd.edu.ph/sciencediliman/article/view/4606

Arias-Gonzalez, J. E., Delesalle, B., Salvat, B., & Galzin, R. (1997). Trophic functioning of the Tiahura reef sector, Moorea Island, French Polynesia. *Coral Reefs, 16*(4), 231–246. https://doi.org/10.1007/s003380050079

Arias-González, J. E., Nuñez-Lara, E., González-Salas, C., & Galzin, R. (2004). Trophic models for investigation of fishing effect on coral reef ecosystems. *Ecological Modelling, 172*(2–4), 197–212. https://doi.org/10.1016/j.ecolmodel.2003.09.007

Azanza, R. V, & Max Taylor, F. J. R. (2001). Are *Pyrodinium* blooms in the Southeast Asian region recurring and spreading? A view at the end of the Millennium. *Ambio, 30*(6), 356–364. http://dx.doi.org/10.1579/0044-7447-30.6.356

Bacalso, R. T. M., & Wolff, M. (2014). Trophic flow structure of the Danajon ecosystem (Central Philippines) and impacts of illegal and destructive fishing practices. *Journal of Marine Systems, 139*, 103–118. https://doi.org/10.1016/j.jmarsys.2014.05.014

Bozec, Y. M., Gascuel, D., & Kulbicki, M. (2004). Trophic model of lagoonal communities in a large open atoll (Uvea, Loyalty islands, New Caledonia). *Aquatic Living Resources, 17*(2), 151–162. https://doi.org/10.1051/alr:2004024

Bundy, A., & Pauly, D. (2001). Selective harvesting by small-scale fisheries: ecosystem analysis of San Miguel Bay, Philippines. *Fisheries Research, 53*(3), 263–281. https://doi.org/10.1016/S0165-7836(00)00295-2

Campos, W. (2003). An ecosystem model of San Pedro Bay, Leyte, Philippines: initial parameter estimates. In *Assessment, management and future directions for coastal fisheries in Asian countries* (pp. 353–364).

Christensen, V., & Walters, C. J. (2003). Ecopath with Ecosim: methods, capabilities and limitations. *Ecological Modelling*, 1–31. https://doi.org/10.1016/j.ecolmodel.2003.09.003

Christensen, V., Walters, C. J., & Pauly, D. (2005). Ecopath with Ecosim: A User's Guide. Fisheries, Centre, University of British Columbia, Vancouver, BC, Canada. Retrieved from ftp://142.103.47.93/Help/Ewe%20User%20Guide%205_1.pdf

Cisneros-Montemayor, A. M., Christensen, V., Arreguin-Sanchez, F., & Sumaila, U. R. (2012). Ecosystem models for management advice: An analysis of recreational and commercial fisheries policies in Baja California Sur, Mexico. *Ecological Modelling, 228*, 8–16. https://doi.org/10.1016/j.ecolmodel.2011.12.021

Froese, R., & Pauly, D. (2014). FishBase. *World Wide Web Electronic Publication*. Retrieved from www.fishbase.org

Funtowicz, S. O., & Ravetz, J. R. (1990). *Uncertainty and quality in science for policy* (Vol. 15). Springer Science & Business Media.

Go, K. T. B., Anticamara, J. A., de Ramos, J. A. J. A., Gabona, S. F., Agao, D. F., Herrera, E. C., … Bitara, A. U. (2015). Species richness and abundance of non-cryptic fish species in the Philippines: a global center of reef fish diversity. *Biodiversity and Conservation*, 24(10), 2475–2495. https://link.springer.com/article/10.1007%2Fs10531-015-0938-0

Guenette, S. (2014). User's guide to the "Ecopath with Ecosim" model of the Bay of Bengal Large Marine (pp. 1–23). Retrieved from www.boblme.org/

Hallegraeff, G. M. (1993). On the global increase of harmful algal bloom. *Wetlands* (Australia). Retrieved from http://ojs.library.unsw.edu.au/index.php/wetlands/article/view/183%5Cnpapers2://publication/uuid/3753E131-5BBA-455B-8931-C6315BFE785A

Longo, C., Hornborg, S., Bartolino, V., Tomczak, M. T., Ciannelli, L., Libralato, S., & Belgrano, A. (2015). Role of trophic models and indicators in current marine fisheries management. *Marine Ecology Progress Series, 538*(Fao 1995), 257–272. https://doi.org/10.3354/meps11502

Morissette, L. (2007). Complexity, cost and quality of ecosystem models and their impact on resilience: a comparative analysis, with emphasis on marine mammals and the Gulf of St Lawrence, (October), 1–260. Retrieved from http://nova.wh.whoi.edu/palit/Morissette_2007_Unknown_Complexity, cost and quality of ecosystem models and their impact on resilience a comparative analysis, with emphasis on marine mammals and the Gulf of St Lawrence.PDF

Okey, T. A., Banks, S., Born, A. F., Bustamante, R. H., Calvopiña,

M., Edgar, G. J., … Wallem, P. (2004). A trophic model of a Galapagos subtidal rocky reef for evaluating fisheries and conservation strategies. *Ecological Modelling, 172*(2–4), 383–401. https://doi.org/10.1016/j.ecolmodel.2003.09.019

Palomares, M. L. D., & Pauly, D. (1998). Predicting food consumption of fish populations as functions of mortality, food type, morphometrics, temperature and salinity. Marine and *Freshwater Research, 49*(5), 447–453. https://doi.org/10.1071/MF98015

Pauly, D., Christensen, V., & Walters, C. (2000). Ecopath, Ecosim, and Ecospace as tools for evaluating ecosystem impact of fisheries. ICES *Journal of Marine Science, 57*(3), 697–706. https://doi.org/10.1006/jmsc.2000.0726

Plagányi, É. E., & Butterworth, D. S. (2004). A critical look at the potential of Ecopath with ecosim to assist in practical fisheries management. *African Journal of Marine Science, 26*(1), 261–287. https://doi.org/10.2989/18142320409504061

Tesfamichael, D. (2012). Assessment of the Red Sea ecosystem with emphasis on fisheries, (July), 241 pp.

Ulanowicz, R.E., & Puccia, C. J. (1990). *Mixed trophic impacts in ecosystems* (5th ed.). Coenoses.

Wells, M. L., Trainer, V. L., Smayda, T. J., Karlson, B. S. O., Trick, C. G., Kudela, R. M., … Cochlan, W. P. (2015). Harmful algal blooms and climate change: Learning from the past and present to forecast the future. *Harmful Algae*, 49, 68–93. https://doi.org/10.1016/j.hal.2015.07.009